EAGLE GROUP®
Profit from the Eagle Advantage®

Item No.: _____
Project No.: _____
S.I.S. No.: _____

Specification Sheet

Panco® Aluminum Racks with Side Panels

MODELS:
❑ ***ORO-1840***
❑ ***OR-1840***

Short Form Specifications

Eagle Panco Aluminum Rack with Side Panels, standard model ORO-1840. Constructed of 1″ square tubular aluminum frame and supports, with each frame and cross support junction joined with a two-piece aluminum gusset riveted to frame. 1½″ slide spacing to accommodate (40) 18″ x 26″ full size sheet pans. Furnished with 5″-diameter casters. Unit shipped knocked down.

Eagle Panco Aluminum Rack with Side Panels, heavy duty model OR-1840. Constructed of 1″ square tubular frame and support with 0.100″-thick aluminum die-formed top and bottom, with vinyl bumper around the top. Extruded aluminum corner posts riveted to top and bottom. ½″-diameter reinforcing rods. 1½″ slide spacing to accommodate (40) 18″ x 26″ full size sheet pans. Furnished with 5″-diameter casters. Unit shipped assembled.



heavy duty rack with side panels

Options / Accessories
❑ Casters with locking brakes

Features on model #ORO-1840 — Standard
- Frame and supports: 1″ (25mm) square aluminum tubing with 0.063″ (2mm) wall.
- Gussets: Each frame and cross support junction shall be joined with a two-piece die-stamped aluminum gusset, riveted to frame and cross supports.
- Tray slides: extruded aluminum sections with a 9⁄16″ (14mm) lip and beaded edge, spaced 1½″ (38mm).
- Casters: 5″ (127mm)-diameter NSF-approved, non-marking rubber tired wheels on swivel stem plated casters with polymer tread.
- Shipped knocked down.

Features on model #OR-1840 — Heavy Duty
- Top and Bottom: 0.100″ (3mm) thick aluminum die-formed, with vinyl perimeter bumper around the top.
- Corner posts: Extruded aluminum channel shaped, riveted to top and bottom.
- Reinforcing rods: ½″ (13mm) diameter aluminum rod between frames for added rigidity.
- Tray slides: extruded aluminum sections with a 9⁄16″ (14mm) lip and beaded edge, spaced 1½″ (38mm).
- Casters: 5″ (127mm)-diameter NSF-approved, non-marking rubber tired wheels on swivel stem plated casters with polymer tread.
- Shipped assembled with solid top, bottom, and top vinyl perimeter bumper.

EAGLE GROUP
100 Industrial Boulevard, Clayton, DE 19938-8903 USA
Phone: 302-653-3000 • 800-441-8440 • Fax: 302-653-2065
www.eaglegrp.com
www.eaglemhc.com

Certifications / Approvals
NSF

AutoQuotes

KCL

For custom configuration or fabrication needs, contact our **SpecFAB® Division.**
Phone: 302-653-3000 • Fax: 302-653-2065 • e-mail: quotes@eaglegrp.com

Spec sheets available for viewing, printing or downloading from our online literature library at our websites

Eagle Foodservice Equipment, Eagle MHC, and SpecFAB® are divisions of Eagle Group. ©2024 by the Eagle Group

EAGLE GROUP®
Profit from the Eagle Advantage®

Item No.: _____
Project No.: _____
S.I.S. No.: _____

Panco® Aluminum Racks with Side Panels

#ORO-1840 —Standard Model

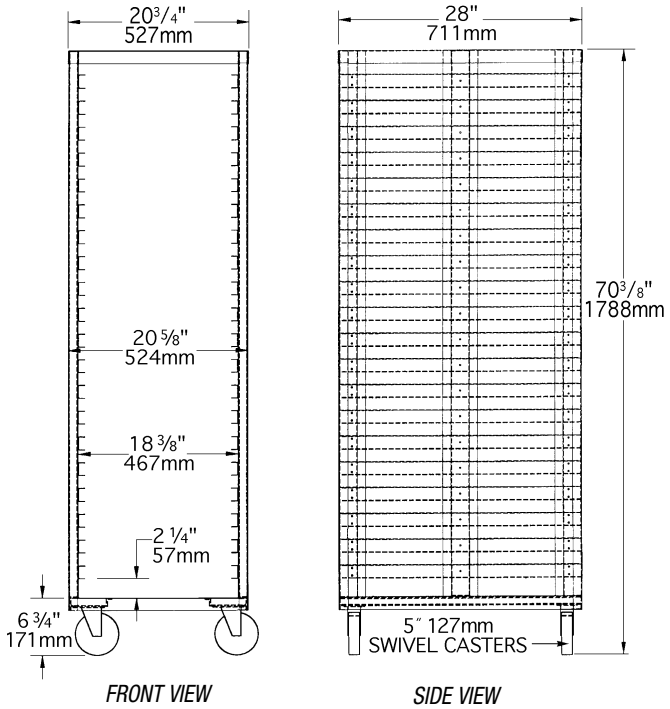

#OR-1840 —Heavy Duty Model

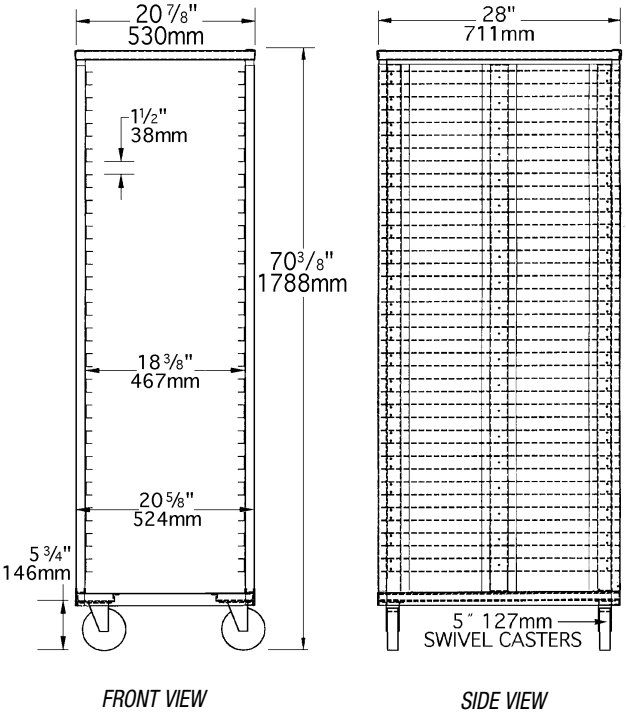

	overall dimensions						sliding space		weight		tray
	width		depth		height						
model #	in.	mm	in.	mm	in.	mm	in.	mm	lbs.	kg	capacity
ORO-1840	20¾″	527	28″	711	70⅜″	1788	1½″	38	68	30.8	40
OR-1840	20⅞″	530	28″	711	70⅜″	1788	1½″	38	88	39.9	40

EAGLE GROUP
100 Industrial Boulevard, Clayton, DE 19938-8903 USA
Phone: 302-653-3000 or 800-441-8440 • Fax: 302-653-2065
www.eaglegrp.com • www.eaglemhc.com

Printed in U.S.A.
©2024 by Eagle Group
Rev. 06/24

Spec sheets available for viewing, printing or downloading from our online literature library at our websites

Although every attempt has been made to ensure the accuracy of the information provided, we cannot be held responsible for typographical or printing errors. Information and specifications are subject to change without notice. Please confirm at time of order.